LM4990 Boomer® Audio Power Amplifier Series 2 Watt Audio Power Amplifier with Selectable Shutdown Logic Level

Check for Samples: LM4990

FEATURES

- **Available in Space-Saving Packages: WSON, Exposed-DAP MSOP-PowerPAD, VSSOP, and DSBGA**
- **Ultra Low Current Shutdown Mode**
- **Improved Click and Pop Circuitry Eliminates Noise During Turn-On and Turn-Off Transitions**
- **2.2 - 5.5V Operation**
- **No Output Coupling Capacitors, Snubber Networks or Bootstrap Capacitors Required**
- **Unity-Gain Stable**
- **External Gain Configuration Capability**
- **User Selectable Shutdown High or Low Logic Level**

APPLICATIONS

- **Mobile Phones**
- **PDAs**
- **Portable Electronic Devices**

KEY SPECIFICATIONS

- **Improved PSRR at 217Hz & 1KHz: 62dB**
- **Power Output at 5.0V, 1% THD+N,**
  - **4Ω (NGZ and DGQ only): 2W (Typ)**
- **Power Output at 5.0V, 1% THD+N, 8Ω: 1.25W (Typ)**
- **Power Output at 3.0V, 1% THD+N, 4Ω: 600mW (Typ)**
- **Power Output at 3.0V, 1% THD+N, 8Ω: 425mW (Typ)**
- **Shutdown Current: 0.1μA (Typ)**

DESCRIPTION

The LM4990 is an audio power amplifier primarily designed for demanding applications in mobile phones and other portable communication device applications. It is capable of delivering 1.25 watts of continuous average power to an 8Ω BTL load and 2 watts of continuous average power (NGZ and DGQ only) to a 4Ω BTL load with less than 1% distortion (THD+N+N) from a $5V_{DC}$ power supply.

Boomer audio power amplifiers were designed specifically to provide high quality output power with a minimal amount of external components. The LM4990 does not require output coupling capacitors or bootstrap capacitors, and therefore is ideally suited for mobile phone and other low voltage applications where minimal power consumption is a primary requirement.

The LM4990 features a low-power consumption shutdown mode. To facilitate this, Shutdown may be enabled by either logic high or low depending on mode selection. Driving the shutdown mode pin either high or low enables the shutdown pin to be driven in a likewise manner to enable shutdown.

The LM4990 contains advanced pop & click circuitry which eliminates noise which would otherwise occur during turn-on and turn-off transitions.

The LM4990 is unity-gain stable and can be configured by external gain-setting resistors.

Please be aware that an important notice concerning availability, standard warranty, and use in critical applications of Texas Instruments semiconductor products and disclaimers thereto appears at the end of this data sheet.

All trademarks are the property of their respective owners.

PRODUCTION DATA information is current as of publication date. Products conform to specifications per the terms of the Texas Instruments standard warranty. Production processing does not necessarily include testing of all parameters.

Copyright © 2002–2013, Texas Instruments Incorporated

Connection Diagram

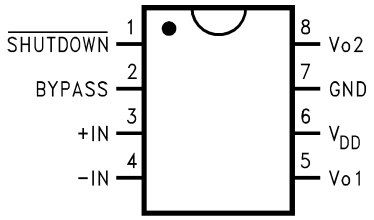

Figure 1. VSSOP Package – Top View
See Package Number DGK

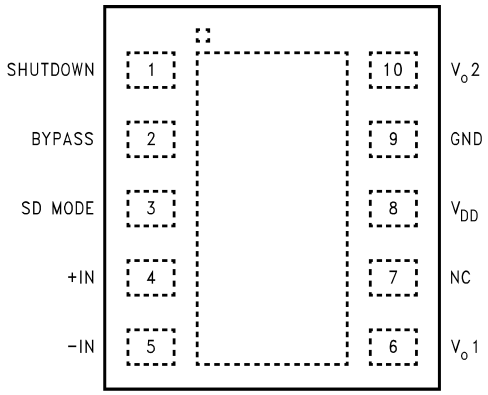

Figure 2. WSON Package – Top View
See Package Number NGZ0010B

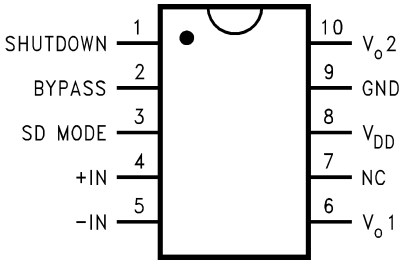

Figure 3. Exposed-DAP MSOP-PowerPAD Package – Top View
See Package Number DGQ

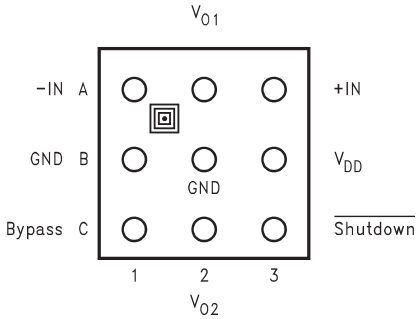

Figure 4. 9-Bump DSBGA (Top View)
See Package Number YZR0009

Package	NGZ	DGQ	DGK	YZR
Shutdown Mode	Selectable	Selectable	Low	Low
Typical Power Output at 5V, 1% THD+N	2W (R_L = 4Ω)	2W (R_L = 4Ω)	1.25W (R_L = 8Ω)	1.25W (R_L = 8Ω)

Copyright © 2002–2013, Texas Instruments Incorporated

Typical Application

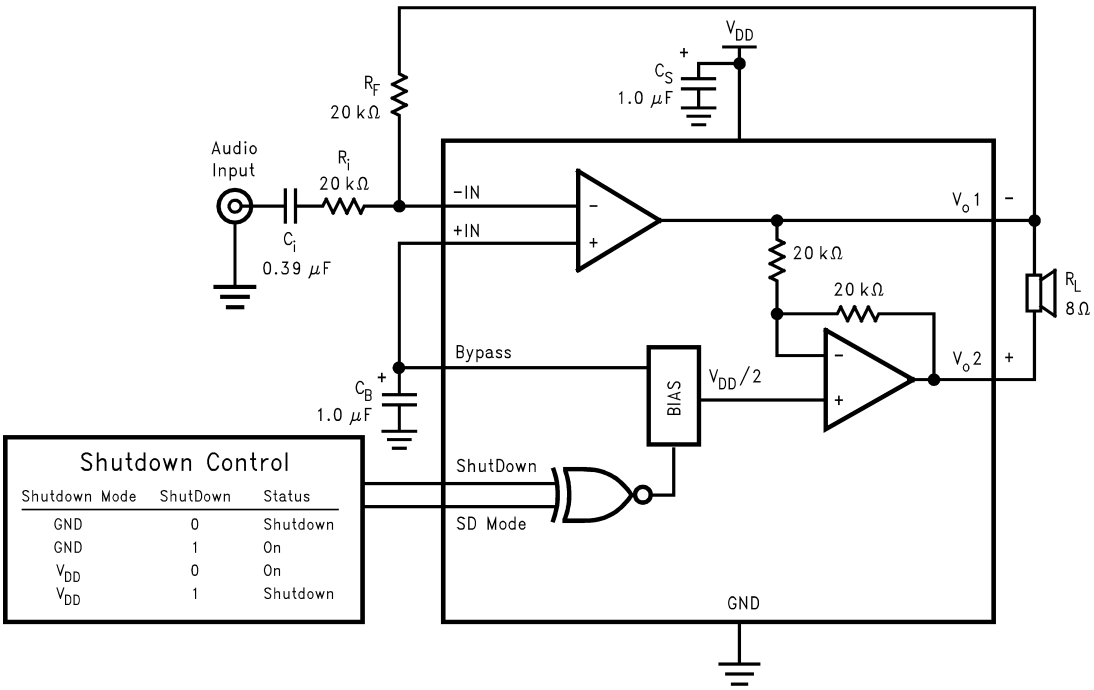

Note: DGK and YZR packaged devices are active low only; Shutdown Mode pin is internally tied to GND.

Figure 5. Typical Audio Amplifier Application Circuit (NGZ and DGQ)

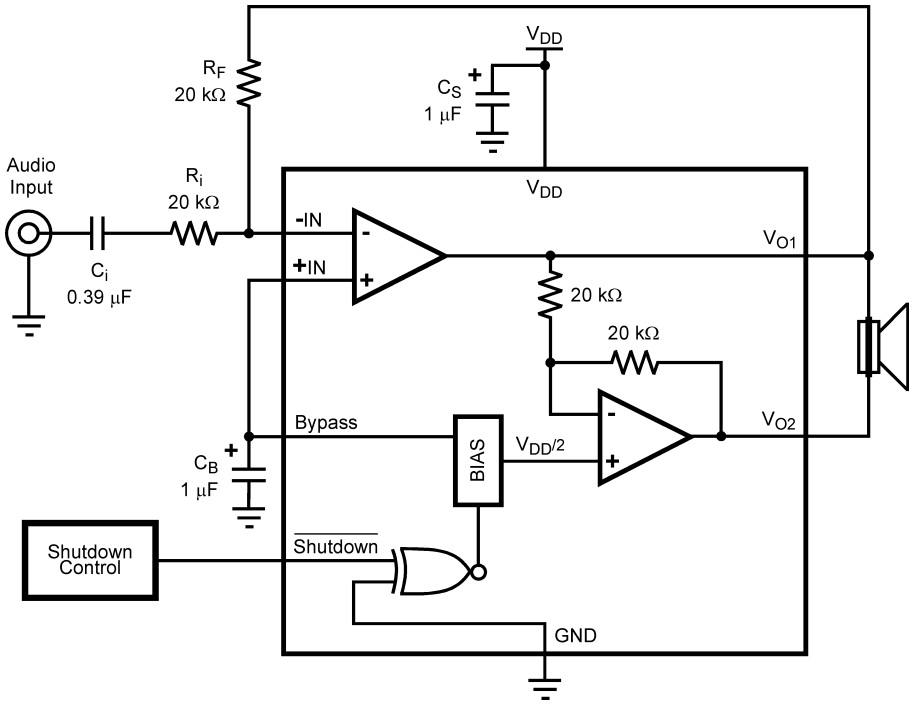

Figure 6. Typical Audio Amplifier Application Circuit (YZR and DGK)

These devices have limited built-in ESD protection. The leads should be shorted together or the device placed in conductive foam during storage or handling to prevent electrostatic damage to the MOS gates.

Absolute Maximum Ratings[1][2]

Supply Voltage[3]		6.0V
Storage Temperature		−65°C to +150°C
Input Voltage		−0.3V to V_{DD} +0.3V
Power Dissipation[4][5]		Internally Limited
ESD Susceptibility[6]		2000V
ESD Susceptibility[7]		200V
Junction Temperature		150°C
Thermal Resistance	θ_{JC} (VSSOP)	56°C/W
	θ_{JA} (VSSOP)	190°C/W
	θ_{JA} (9 Bump DSBGA)[8]	180°C/W
	θ_{JA} (WSON)	63°C/W[9]
	θ_{JC} (WSON)	12°C/W[9]
Soldering Information: See the AN-1187 Application Report		

(1) Absolute Maximum Ratings indicate limits beyond which damage to the device may occur. Operating Ratings indicate conditions for which the device is intended to be functional but specific performance is not ensured. Electrical Characteristics state DC and AC electrical specifications under particular test conditions which ensure specific performance limits. This assumes that the device is within the Operating Ratings. Specifications are not ensured for parameters where no limit is given, however, the typical value is a good indication of device performance.
(2) If Military/Aerospace specified devices are required, please contact the Texas Instruments Sales Office/ Distributors for availability and specifications.
(3) If the product is in Shutdown mode and V_{DD} exceeds 6V (to a max of 8V V_{DD}), then most of the excess current will flow through the ESD protection circuits. If the source impedance limits the current to a max of 10mA, then the device will be protected. If the device is enabled when V_{DD} is greater than 5.5V and less than 6.5V, no damage will occur, although operation life will be reduced. Operation above 6.5V with no current limit will result in permanent damage.
(4) The maximum power dissipation must be derated at elevated temperatures and is dictated by T_{JMAX}, θ_{JA}, and the ambient temperature T_A. The maximum allowable power dissipation is $P_{DMAX} = (T_{JMAX}–T_A)/\theta_{JA}$ or the number given in Absolute Maximum Ratings, whichever is lower. For the LM4990, see power derating curves for additional information.
(5) Maximum power dissipation in the device (P_{DMAX}) occurs at an output power level significantly below full output power. P_{DMAX} can be calculated using Equation 1 shown in the Application Information section. It may also be obtained from the power dissipation graphs.
(6) Human body model, 100pF discharged through a 1.5kΩ resistor.
(7) Machine Model, 220pF – 240pF discharged through all pins.
(8) All bumps have the same thermal resistance and contribute equally when used to lower thermal resistance. All bumps must be connected to achieve specified thermal resistance.
(9) The Exposed-DAP of the NGZ0010B package should be electrically connected to GND or an electrically isolated copper area. the LM4990LD demo board has the Exposed-DAP connected to GND with a PCB area of 86.7mils x 585mils (2.02mm x 14.86mm) on the copper top layer and 550mils x 710mils (13.97mm x 18.03mm) on the copper bottom layer.

Operating Ratings

Temperature Range	$T_{MIN} \le T_A \le T_{MAX}$	−40°C ≤ T_A ≤ 85°C
Supply Voltage		2.2V ≤ V_{DD} ≤ 5.5V

Copyright © 2002–2013, Texas Instruments Incorporated

Electrical Characteristics V_{DD} = 5V(1)(2)

The following specifications apply for the circuit shown in Figure 1, unless otherwise specified. Limits apply for T_A = 25°C.

Symbol	Parameter		Conditions	LM4990		Units (Limits)
				Typical(3)	Limit(4)(5)	
I_{DD}	Quiescent Power Supply Current		V_{IN} = 0V, I_o = 0A, No Load	3	7	mA (max)
			V_{IN} = 0V, I_o = 0A, 8Ω Load	4	10	mA (max)
I_{SD}	Shutdown Current		V_{SD} = $V_{SD\ Mode}$(6)	0.1	2.0	µA (max)
V_{SDIH}	Shutdown Voltage Input High		$V_{SD\ MODE}$ = V_{DD}	1.5		V
V_{SDIL}	Shutdown Voltage Input Low		$V_{SD\ MODE}$ = V_{DD}	1.3		V
V_{SDIH}	Shutdown Voltage Input High		$V_{SD\ MODE}$ = GND	1.5		V
V_{SDIL}	Shutdown Voltage Input Low		$V_{SD\ MODE}$ = GND	1.3		V
V_{OS}	Output Offset Voltage			7	50	mV (max)
R_{OUT}	Resistor Output to GND(7)			8.5	9.7	kΩ (max)
					7.0	kΩ (min)
P_o	Output Power	(8Ω)	THD+N = 1% (max); f = 1kHz	1.25	0.9	W (min)
		(4Ω)(8)(9)	THD+N = 1% (max); f = 1kHz	2		W
T_{WU}	Wake-up time			100		ms
THD+N +N	Total Harmonic Distortion+Noise		P_o = 0.5Wrms; f = 1kHz	0.2		%
PSRR	Power Supply Rejection Ratio		V_{ripple} = 200mV sine p-p Input terminated with 10Ω	60 (f = 217Hz) 64 (f = 1kHz)	55	dB (min)

(1) Absolute Maximum Ratings indicate limits beyond which damage to the device may occur. Operating Ratings indicate conditions for which the device is intended to be functional but specific performance is not ensured. Electrical Characteristics state DC and AC electrical specifications under particular test conditions which ensure specific performance limits. This assumes that the device is within the Operating Ratings. Specifications are not ensured for parameters where no limit is given, however, the typical value is a good indication of device performance.
(2) All voltages are measured with respect to the ground pin, unless otherwise specified.
(3) Typicals are measured at 25°C and represent the parametric norm.
(4) Limits are specified to AOQL (Average Outgoing Quality Level).
(5) Datasheet min/max specification limits are specified by design, test, or statistical analysis.
(6) For DSBGA only, shutdown current is measured in a Normal Room Environment. Exposure to direct sunlight will increase I_{SD} by a maximum of 2µA.
(7) R_{ROUT} is measured from the output pin to ground. This value represents the parallel combination of the 10kΩ output resistors and the two 20kΩ resistors.
(8) The Exposed-DAP of the NGZ0010B package should be electrically connected to GND or an electrically isolated copper area. the LM4990LD demo board has the Exposed-DAP connected to GND with a PCB area of 86.7mils x 585mils (2.02mm x 14.86mm) on the copper top layer and 550mils x 710mils (13.97mm x 18.03mm) on the copper bottom layer.
(9) The thermal performance of the WSON and exposed-DAP MSOP-PowerPAD packages when used with the exposed-DAP connected to a thermal plane is sufficient for driving 4Ω loads. The VSSOP and DSBGA packages do not have the thermal performance necessary for driving 4Ω loads with a 5V supply and is not recommended for this application.

Copyright © 2002–2013, Texas Instruments Incorporated

Electrical Characteristics V_{DD} = 3V(1)(2)

The following specifications apply for the circuit shown in Figure 1, unless otherwise specified. Limits apply for T_A = 25°C.

Symbol	Parameter		Conditions	LM4990		Units (Limits)
				Typical(3)	Limit(4)(5)	
I_{DD}	Quiescent Power Supply Current		V_{IN} = 0V, I_o = 0A, No Load	2	7	mA (max)
			V_{IN} = 0V, I_o = 0A, 8Ω Load	3	9	mA (max)
I_{SD}	Shutdown Current		V_{SD} = $V_{SD\ Mode}$(6)	0.1	2.0	µA (max)
V_{SDIH}	Shutdown Voltage Input High		$V_{SD\ MODE}$ = V_{DD}	1.1		V
V_{SDIL}	Shutdown Voltage Input Low		$V_{SD\ MODE}$ = V_{DD}	0.9		V
V_{SDIH}	Shutdown Voltage Input High		$V_{SD\ MODE}$ = GND	1.3		V
V_{SDIL}	Shutdown Voltage Input Low		$V_{SD\ MODE}$ = GND	1.0		V
V_{OS}	Output Offset Voltage			7	50	mV (max)
R_{OUT}	Resistor Output to GND(7)			8.5	9.7	kΩ (max)
					7.0	kΩ (min)
P_o	Output Power	(8Ω)	THD+N = 1% (max); f = 1kHz	425		mW
		(4Ω)	THD+N = 1% (max); f = 1kHz	600		mW
T_{WU}	Wake-up time			75		ms
THD+N +N	Total Harmonic Distortion+Noise		P_o = 0.25Wrms; f = 1kHz	0.1		%
PSRR	Power Supply Rejection Ratio		V_{ripple} = 200mV sine p-p Input terminated with 10Ω	62 (f = 217Hz) 68 (f = 1kHz)	55	dB (min)

(1) Absolute Maximum Ratings indicate limits beyond which damage to the device may occur. Operating Ratings indicate conditions for which the device is intended to be functional but specific performance is not ensured. Electrical Characteristics state DC and AC electrical specifications under particular test conditions which ensure specific performance limits. This assumes that the device is within the Operating Ratings. Specifications are not ensured for parameters where no limit is given, however, the typical value is a good indication of device performance.
(2) All voltages are measured with respect to the ground pin, unless otherwise specified.
(3) Typicals are measured at 25°C and represent the parametric norm.
(4) Limits are specified to AOQL (Average Outgoing Quality Level).
(5) Datasheet min/max specification limits are specified by design, test, or statistical analysis.
(6) For DSBGA only, shutdown current is measured in a Normal Room Environment. Exposure to direct sunlight will increase I_{SD} by a maximum of 2µA.
(7) R_{ROUT} is measured from the output pin to ground. This value represents the parallel combination of the 10kΩ output resistors and the two 20kΩ resistors.

Copyright © 2002–2013, Texas Instruments Incorporated

Electrical Characteristics V_{DD} = 2.6V(1)(2)

The following specifications apply for the circuit shown in Figure 1, unless otherwise specified. Limits apply for T_A = 25°C.

Symbol	Parameter		Conditions	LM4990		Units (Limits)
				Typical(3)	Limit(4)(5)	
I_{DD}	Quiescent Power Supply Current		V_{IN} = 0V, I_o = 0A, No Load	2.0		mA
			V_{IN} = 0V, I_o = 0A, 8Ω Load	3.0		mA
I_{SD}	Shutdown Current		V_{SD} = $V_{SD\ Mode}$(6)	0.1		µA
V_{SDIH}	Shutdown Voltage Input High		$V_{SD\ MODE}$ = V_{DD}	1.0		V
V_{SDIL}	Shutdown Voltage Input Low		$V_{SD\ MODE}$ = V_{DD}	0.9		V
V_{SDIH}	Shutdown Voltage Input High		$V_{SD\ MODE}$ = GND	1.2		V
V_{SDIL}	Shutdown Voltage Input Low		$V_{SD\ MODE}$ = GND	1.0		V
V_{OS}	Output Offset Voltage			5	50	mV (max)
R_{OUT}	Resistor Output to GND(7)			8.5	9.7	kΩ (max)
					7.0	kΩ (min)
P_o	Output Power	(8Ω)	THD+N = 1% (max); f = 1kHz	300		mW
		(4Ω)	THD+N = 1% (max); f = 1kHz	400		
T_{WU}	Wake-up time			70		ms
THD+N +N	Total Harmonic Distortion+Noise		P_o = 0.15Wrms; f = 1kHz	0.1		%
PSRR	Power Supply Rejection Ratio		V_{ripple} = 200mV sine p-p Input terminated with 10Ω	51 (f = 217Hz) 51 (f = 1kHz)		dB

(1) Absolute Maximum Ratings indicate limits beyond which damage to the device may occur. Operating Ratings indicate conditions for which the device is intended to be functional but specific performance is not ensured. Electrical Characteristics state DC and AC electrical specifications under particular test conditions which ensure specific performance limits. This assumes that the device is within the Operating Ratings. Specifications are not ensured for parameters where no limit is given, however, the typical value is a good indication of device performance.
(2) All voltages are measured with respect to the ground pin, unless otherwise specified.
(3) Typicals are measured at 25°C and represent the parametric norm.
(4) Limits are specified to AOQL (Average Outgoing Quality Level).
(5) Datasheet min/max specification limits are specified by design, test, or statistical analysis.
(6) For DSBGA only, shutdown current is measured in a Normal Room Environment. Exposure to direct sunlight will increase I_{SD} by a maximum of 2µA.
(7) R_{ROUT} is measured from the output pin to ground. This value represents the parallel combination of the 10kΩ output resistors and the two 20kΩ resistors.

External Components Description

See (Figure 5)

Components		Functional Description
1.	R_i	Inverting input resistance which sets the closed-loop gain in conjunction with R_f. This resistor also forms a high pass filter with C_i at f_C= 1/(2π R_iC_i).
2.	C_i	Input coupling capacitor which blocks the DC voltage at the amplifiers input terminals. Also creates a highpass filter with R_i at f_c = 1/(2π R_iC_i). Refer to the section, PROPER SELECTION OF EXTERNAL COMPONENTS, for an explanation of how to determine the value of C_i.
3.	R_f	Feedback resistance which sets the closed-loop gain in conjunction with R_i.
4.	C_S	Supply bypass capacitor which provides power supply filtering. Refer to the POWER SUPPLY BYPASSING section for information concerning proper placement and selection of the supply bypass capacitor.
5.	C_B	Bypass pin capacitor which provides half-supply filtering. Refer to the section, PROPER SELECTION OF EXTERNAL COMPONENTS, for information concerning proper placement and selection of C_B.

Copyright © 2002–2013, Texas Instruments Incorporated

Typical Performance Characteristics
NGZ and DGQ Specific Characteristics

THD+N+N vs Frequency
V_{DD} = 5V, R_L = 4Ω, and P_O = 1W

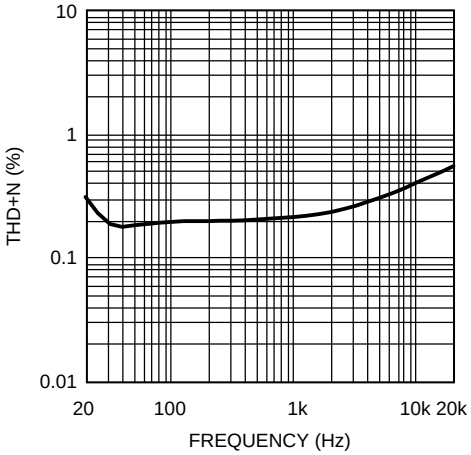

Figure 7.

THD+N+N vs Output Power
V_{DD} = 5V, R_L = 4Ω, and f = 1 kHz

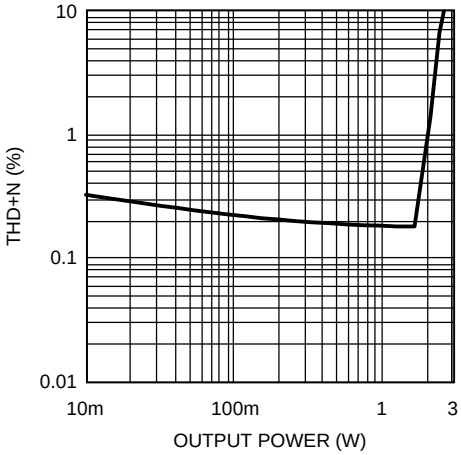

Figure 8.

Copyright © 2002–2013, Texas Instruments Incorporated

Typical Performance Characteristics

THD+N+N vs Frequency
V_{DD} = 5V, R_L = 8Ω, and P_O = 500mW

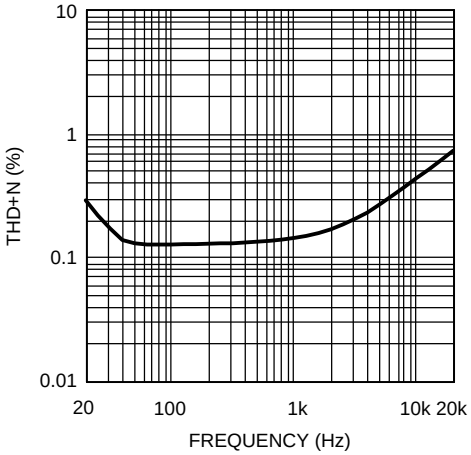

Figure 9.

THD+N+N vs Frequency
V_{DD} = 3V, R_L = 4Ω, and P_O = 500mW

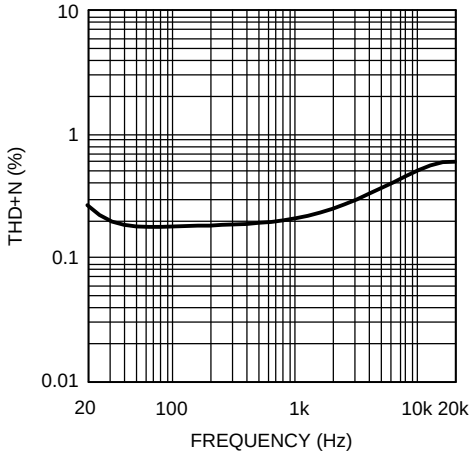

Figure 10.

THD+N+N vs Frequency
V_{DD} = 3V, R_L = 8Ω, and P_O = 250mW

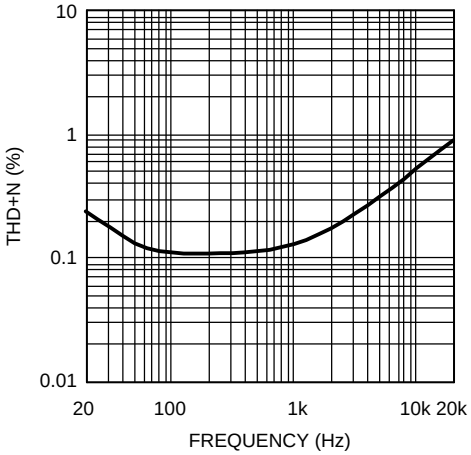

Figure 11.

THD+N+N vs Frequency
V_{DD} = 2.6V, R_L = 4Ω, and P_O = 150mW

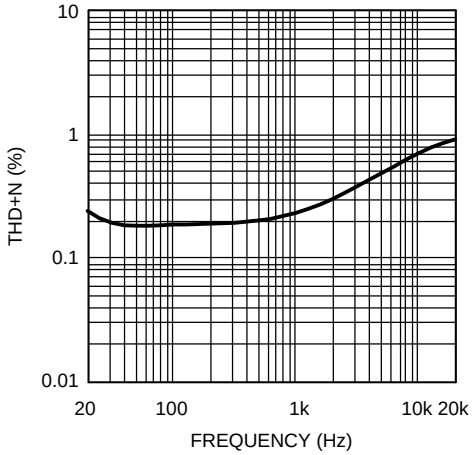

Figure 12.

THD+N+N vs Output Power
V_{DD} = 2.6V, R_L = 8Ω, and P_O = 150mW

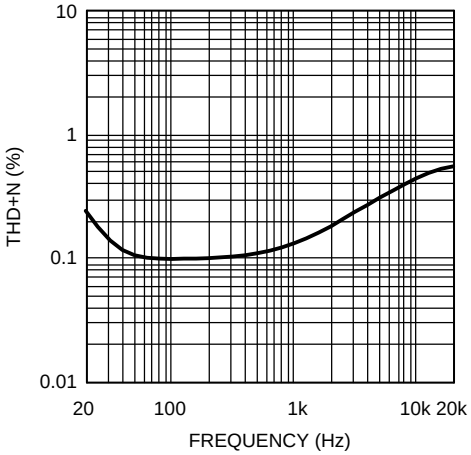

Figure 13.

THD+N+N vs Output Power
V_{DD} = 5V, R_L = 8Ω, and f = 1kHz

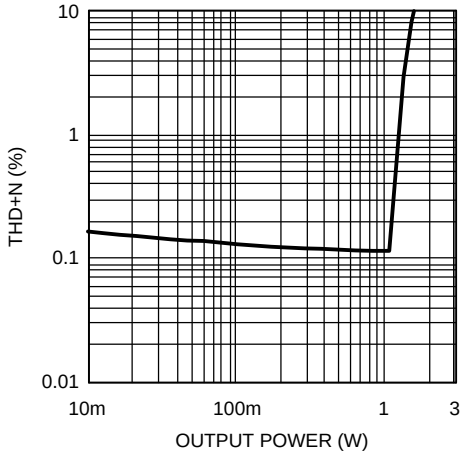

Figure 14.

Copyright © 2002–2013, Texas Instruments Incorporated

Typical Performance Characteristics (continued)

THD+N+N vs Output Power
V_{DD} = 3V, R_L = 4Ω, and f = 1kHz

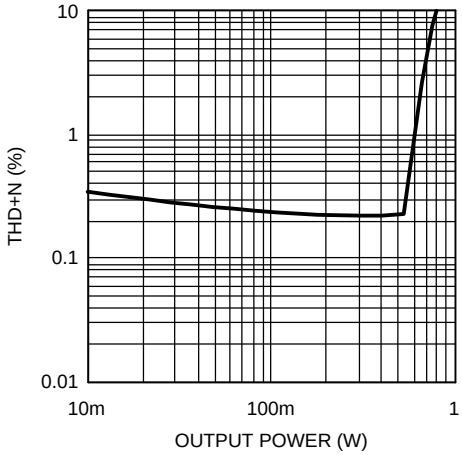

Figure 15.

THD+N+N vs Output Power
V_{DD} = 3V, R_L = 8Ω, and f = 1kHz

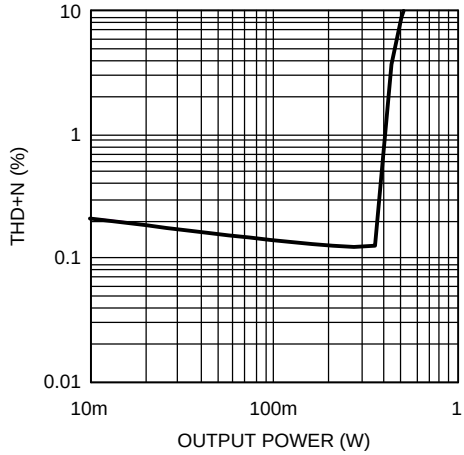

Figure 16.

THD+N+N vs Output Power
V_{DD} = 2.6V, R_L = 4Ω, and f = 1kHz

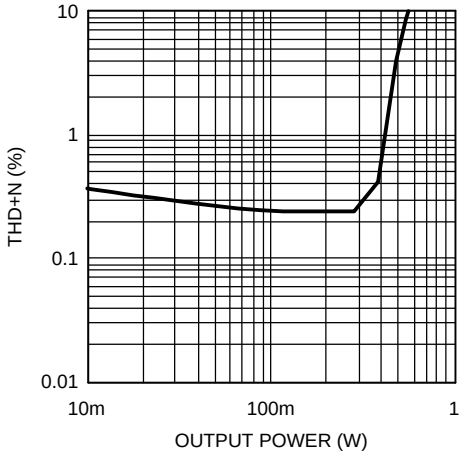

Figure 17.

THD+N+N vs Output Power
V_{DD} = 2.6V, R_L = 8Ω, and f = 1kHz

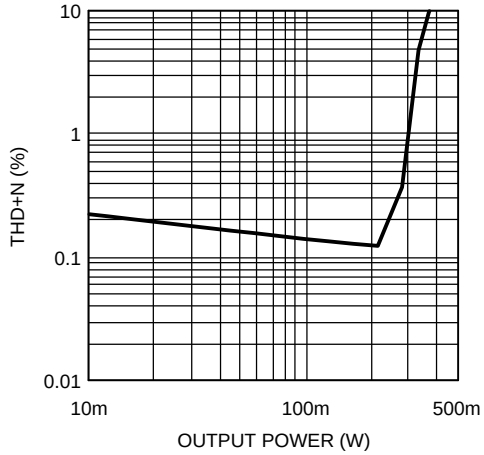

Figure 18.

Power Supply Rejection Ratio (PSRR) vs Frequency
V_{DD} = 5V, R_L = 8Ω, input 10Ω terminated

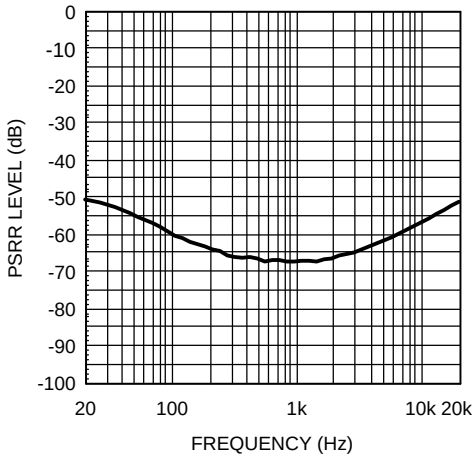

Figure 19.

Power Supply Rejection Ratio (PSRR) vs Frequency
V_{DD} = 5V, R_L = 8Ω, input floating

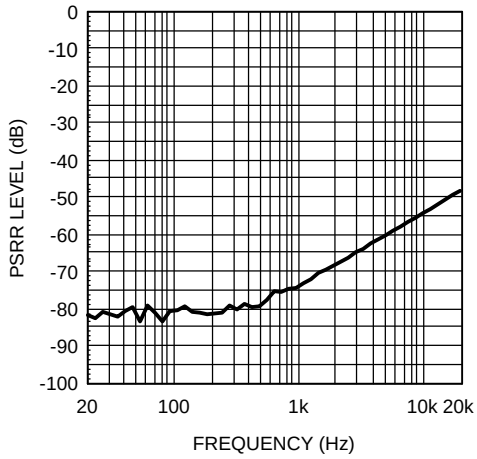

Figure 20.

Copyright © 2002–2013, Texas Instruments Incorporated

Typical Performance Characteristics (continued)

Power Supply Rejection Ratio (PSRR) vs Frequency
V_{DD} = 3V, R_L = 8Ω, input 10Ω terminated

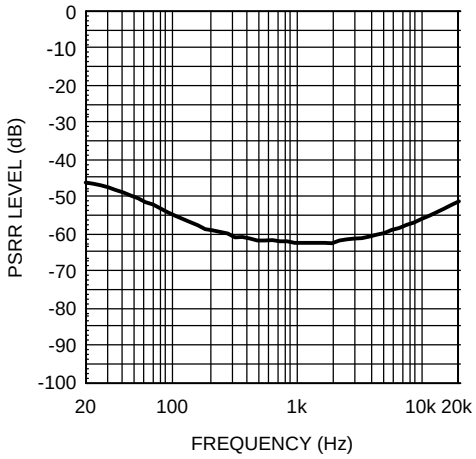

Figure 21.

Power Supply Rejection Ratio (PSRR) vs Frequency
V_{DD} = 3V, R_L = 8Ω, input floating

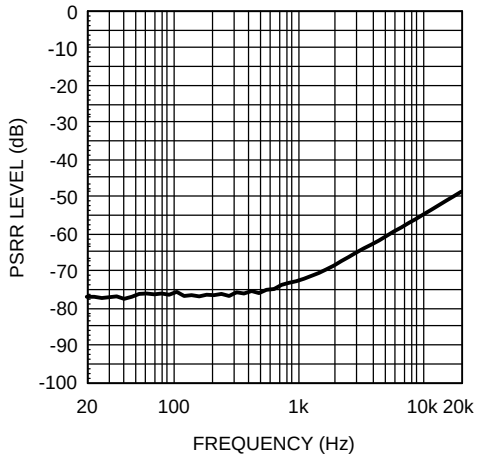

Figure 22.

Power Supply Rejection Ratio (PSRR) vs Frequency
V_{DD} = 2.6V, R_L = 8Ω, input 10Ω terminated

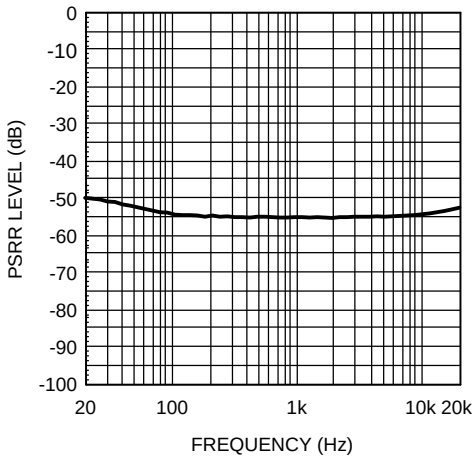

Figure 23.

Power Supply Rejection Ratio (PSRR) vs Frequency
V_{DD} = 2.6V, R_L = 8Ω, Input Floating

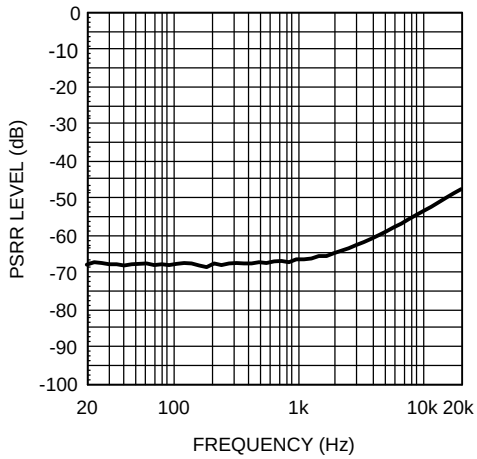

Figure 24.

Open Loop Frequency Response, 5V

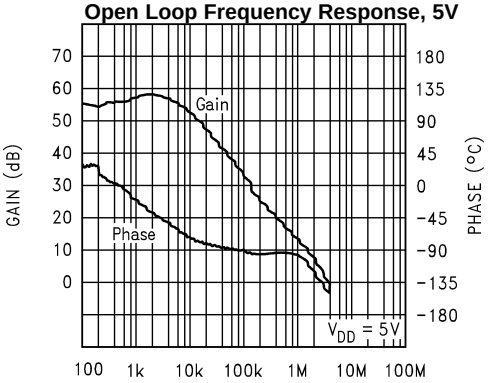

Figure 25.

Noise Floor, 5V, 8Ω
80kHz Bandwidth, Input to GND

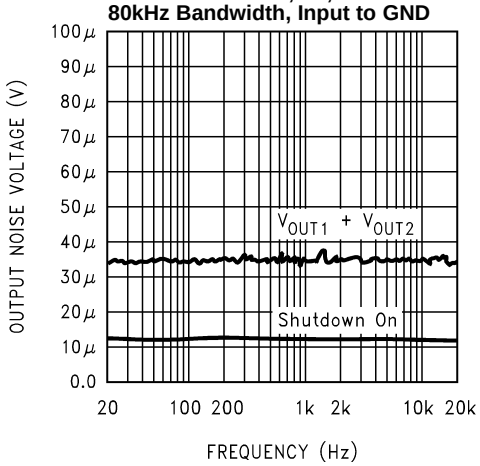

Figure 26.

Typical Performance Characteristics (continued)

Power Dissipation vs Output Power, V_{DD} = 5V

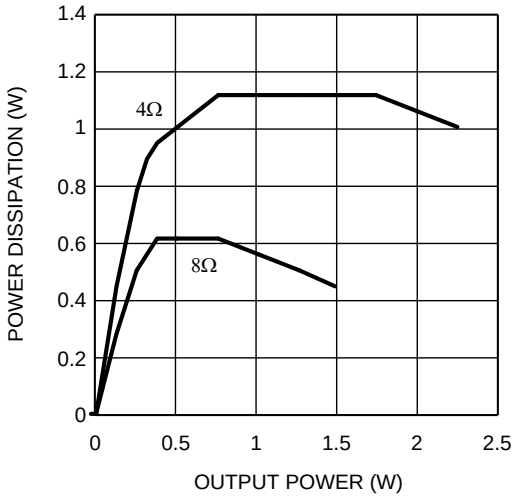

Figure 27.

Power Dissipation vs Output Power, V_{DD} = 3V

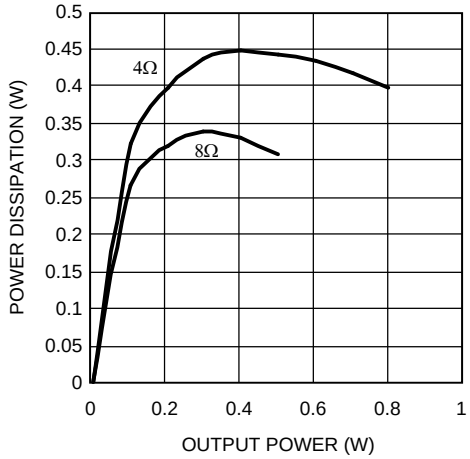

Figure 28.

Power Dissipation vs Output Power, V_{DD} = 2.6V

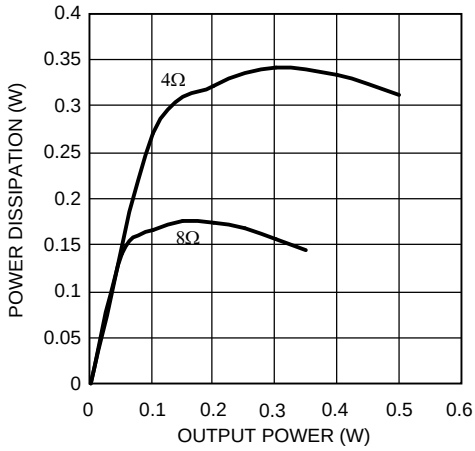

Figure 29.

Shutdown Hysteresis Voltage
V_{DD} = 5V, SD Mode = V_{DD}

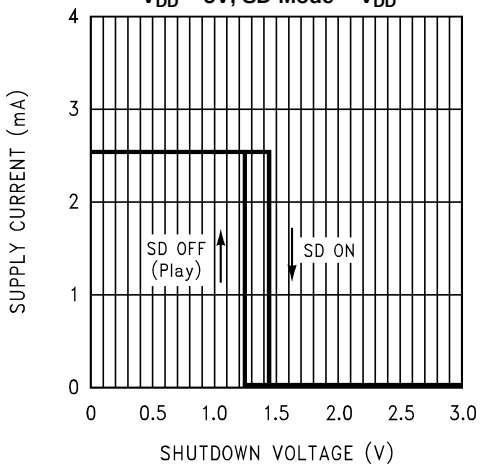

Figure 30.

Shutdown Hysteresis Voltage
V_{DD} = 5V, SD Mode = GND

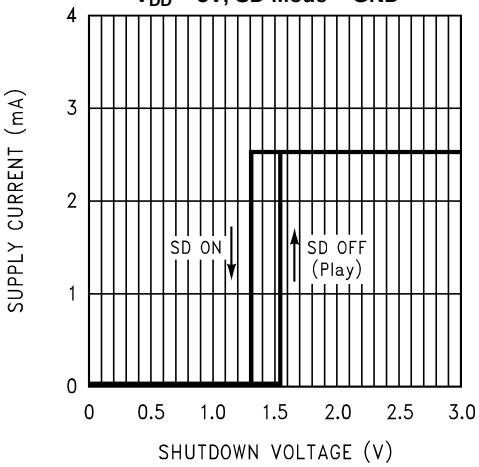

Figure 31.

Shutdown Hysteresis Voltage
V_{DD} = 3V, SD Mode = V_{DD}

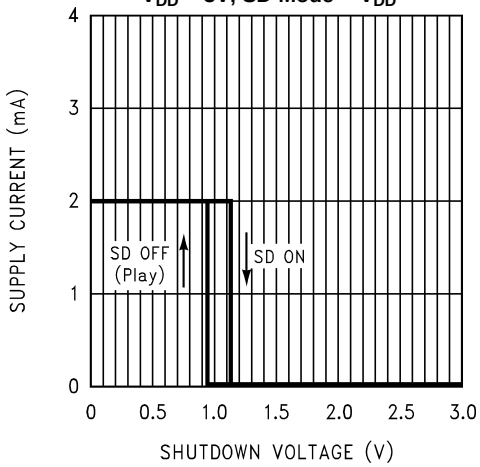

Figure 32.

Copyright © 2002–2013, Texas Instruments Incorporated

Typical Performance Characteristics (continued)

Shutdown Hysteresis Voltage
V_{DD} = 3V, SD Mode = GND

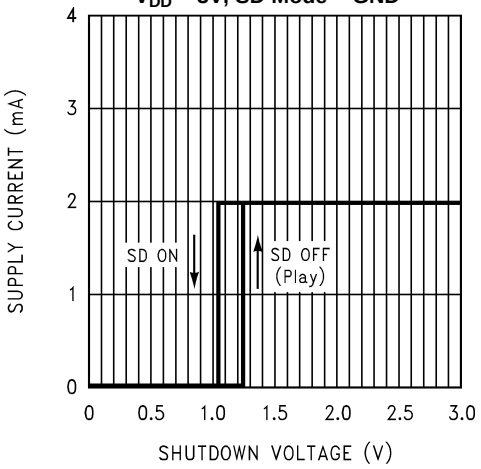

Figure 33.

Shutdown Hysteresis Voltage
V_{DD} = 2.6V, SD Mode = V_{DD}

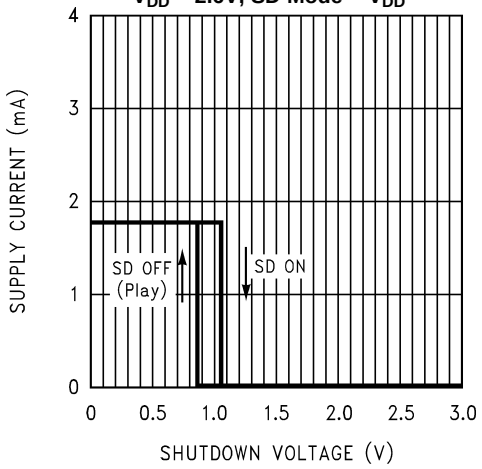

Figure 34.

Shutdown Hysteresis Voltage
V_{DD} = 2.6V, SD Mode = GND

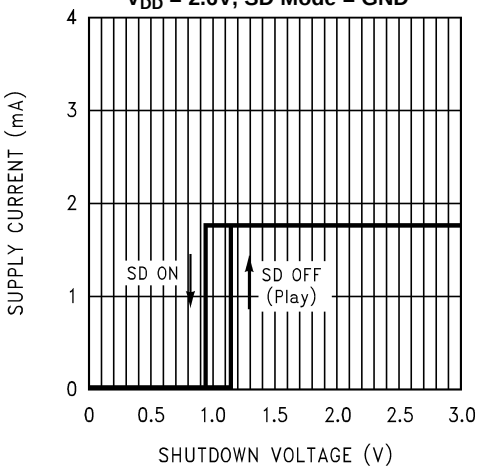

Figure 35.

Output Power vs Supply Voltage, R_L = 4Ω

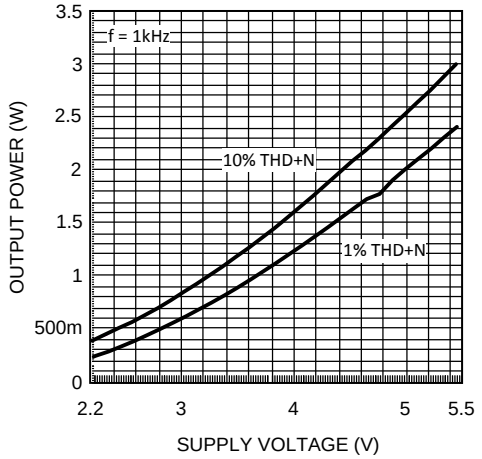

Figure 36.

Output Power vs Supply Voltage, R_L = 8Ω

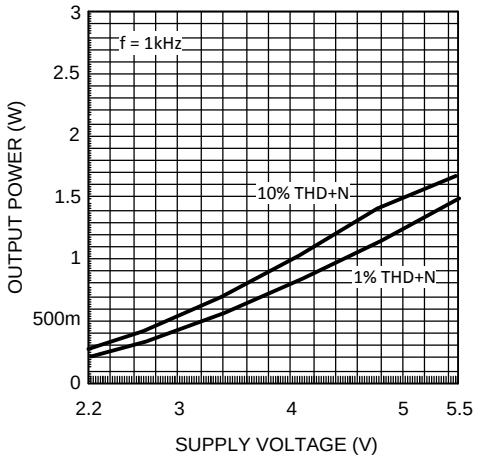

Figure 37.

Output Power vs Supply Voltage, R_L = 16Ω

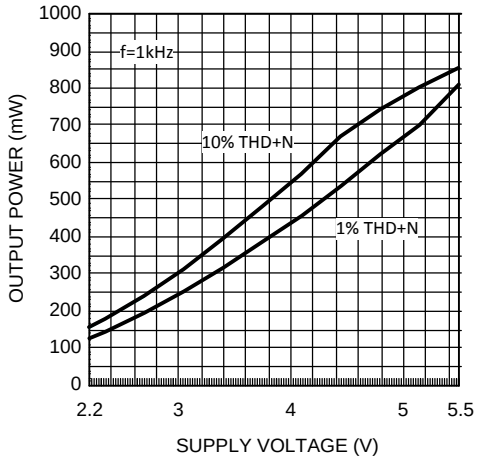

Figure 38.

Typical Performance Characteristics (continued)

Output Power vs Supply Voltage, R_L = 32Ω

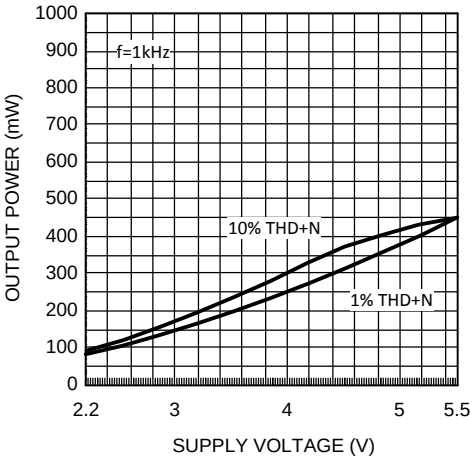

Figure 39.

Frequency Response vs Input Capacitor Size

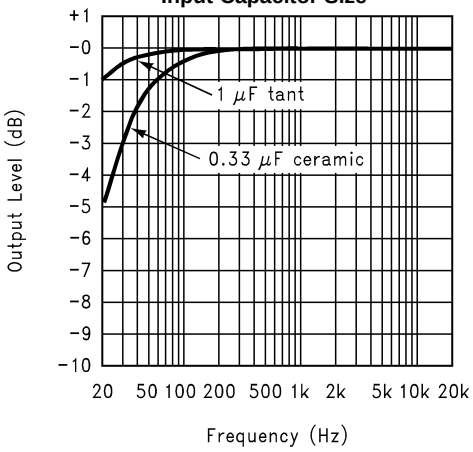

Figure 40.

Copyright © 2002–2013, Texas Instruments Incorporated

APPLICATION INFORMATION

BRIDGE CONFIGURATION EXPLANATION

As shown in Figure 5, the LM4990 has two internal operational amplifiers. The first amplifier's gain is externally configurable, while the second amplifier is internally fixed in a unity-gain, inverting configuration. The closed-loop gain of the first amplifier is set by selecting the ratio of R_f to R_i while the second amplifier's gain is fixed by the two internal 20kΩ resistors. Figure 5 shows that the output of amplifier one serves as the input to amplifier two which results in both amplifiers producing signals identical in magnitude, but out of phase by 180°. Consequently, the differential gain for the IC is

$$A_{VD} = 2 * (R_f/R_i) \quad (1)$$

By driving the load differentially through outputs Vo1 and Vo2, an amplifier configuration commonly referred to as “bridged mode” is established. Bridged mode operation is different from the classical single-ended amplifier configuration where one side of the load is connected to ground.

A bridge amplifier design has a few distinct advantages over the single-ended configuration, as it provides differential drive to the load, thus doubling output swing for a specified supply voltage. Four times the output power is possible as compared to a single-ended amplifier under the same conditions. This increase in attainable output power assumes that the amplifier is not current limited or clipped. In order to choose an amplifier's closed-loop gain without causing excessive clipping, please refer to the AUDIO POWER AMPLIFIER DESIGN section.

A bridge configuration, such as the one used in LM4990, also creates a second advantage over single-ended amplifiers. Since the differential outputs, Vo1 and Vo2, are biased at half-supply, no net DC voltage exists across the load. This eliminates the need for an output coupling capacitor which is required in a single supply, single-ended amplifier configuration. Without an output coupling capacitor, the half-supply bias across the load would result in both increased internal IC power dissipation and also possible loudspeaker damage.

POWER DISSIPATION

Power dissipation is a major concern when designing a successful amplifier, whether the amplifier is bridged or single-ended. A direct consequence of the increased power delivered to the load by a bridge amplifier is an increase in internal power dissipation. Since the LM4990 has two operational amplifiers in one package, the maximum internal power dissipation is 4 times that of a single-ended amplifier. The maximum power dissipation for a given application can be derived from the power dissipation graphs or from Equation 2.

$$P_{DMAX} = 4*(V_{DD})^2/(2\pi^2 R_L) \quad (2)$$

It is critical that the maximum junction temperature T_{JMAX} of 150°C is not exceeded. T_{JMAX} can be determined from the power derating curves by using P_{DMAX} and the PC board foil area. By adding copper foil, the thermal resistance of the application can be reduced from the free air value of θ_{JA}, resulting in higher P_{DMAX} values without thermal shutdown protection circuitry being activated. Additional copper foil can be added to any of the leads connected to the LM4990. It is especially effective when connected to V_{DD}, GND, and the output pins. Refer to the application information on the LM4990 reference design board for an example of good heat sinking. If T_{JMAX} still exceeds 150°C, then additional changes must be made. These changes can include reduced supply voltage, higher load impedance, or reduced ambient temperature. Internal power dissipation is a function of output power. Refer to the Typical Performance Characteristics curves for power dissipation information for different output powers and output loading.

POWER SUPPLY BYPASSING

As with any amplifier, proper supply bypassing is critical for low noise performance and high power supply rejection. The capacitor location on both the bypass and power supply pins should be as close to the device as possible. Typical applications employ a 5V regulator with 10µF tantalum or electrolytic capacitor and a ceramic bypass capacitor which aid in supply stability. This does not eliminate the need for bypassing the supply nodes of the LM4990. The selection of a bypass capacitor, especially C_B, is dependent upon PSRR requirements, click and pop performance (as explained in the section, PROPER SELECTION OF EXTERNAL COMPONENTS), system cost, and size constraints.

Copyright © 2002–2013, Texas Instruments Incorporated

SHUTDOWN FUNCTION

In order to reduce power consumption while not in use, the LM4990 contains shutdown circuitry that is used to turn off the amplifier's bias circuitry. In addition, the LM4990 contains a Shutdown Mode pin (NGZ and DGQ packages only), allowing the designer to designate whether the part will be driven into shutdown with a high level logic signal or a low level logic signal. This allows the designer maximum flexibility in device use, as the Shutdown Mode pin may simply be tied permanently to either V_{DD} or GND to set the LM4990 as either a "shutdown-high" device or a "shutdown-low" device, respectively. The device may then be placed into shutdown mode by toggling the Shutdown pin to the same state as the Shutdown Mode pin. For simplicity's sake, this is called "shutdown same", as the LM4990 enters shutdown mode whenever the two pins are in the same logic state. The DGK package lacks this Shutdown Mode feature, and is permanently fixed as a 'shutdown-low' device. The trigger point for either shutdown high or shutdown low is shown as a typical value in the Supply Current vs Shutdown Voltage graphs in the Typical Performance Characteristics section. It is best to switch between ground and supply for maximum performance. While the device may be disabled with shutdown voltages in between ground and supply, the idle current may be greater than the typical value of 0.1µA. In either case, the shutdown pin should be tied to a definite voltage to avoid unwanted state changes.

In many applications, a microcontroller or microprocessor output is used to control the shutdown circuitry, which provides a quick, smooth transition to shutdown. Another solution is to use a single-throw switch in conjunction with an external pull-up resistor (or pull-down, depending on shutdown high or low application). This scheme ensures that the shutdown pin will not float, thus preventing unwanted state changes.

PROPER SELECTION OF EXTERNAL COMPONENTS

Proper selection of external components in applications using integrated power amplifiers is critical to optimize device and system performance. While the LM4990 is tolerant of external component combinations, consideration to component values must be used to maximize overall system quality.

The LM4990 is unity-gain stable which gives the designer maximum system flexibility. The LM4990 should be used in low gain configurations to minimize THD+N+N values, and maximize the signal to noise ratio. Low gain configurations require large input signals to obtain a given output power. Input signals equal to or greater than 1Vrms are available from sources such as audio codecs. Please refer to the section, AUDIO POWER AMPLIFIER DESIGN, for a more complete explanation of proper gain selection.

Besides gain, one of the major considerations is the closed-loop bandwidth of the amplifier. To a large extent, the bandwidth is dictated by the choice of external components shown in Figure 5. The input coupling capacitor, C_i, forms a first order high pass filter which limits low frequency response. This value should be chosen based on needed frequency response for a few distinct reasons.

Selection of Input Capacitor Size

Large input capacitors are both expensive and space hungry for portable designs. Clearly, a certain sized capacitor is needed to couple in low frequencies without severe attenuation. But in many cases the speakers used in portable systems, whether internal or external, have little ability to reproduce signals below 100Hz to 150Hz. Thus, using a large input capacitor may not increase actual system performance.

In addition to system cost and size, click and pop performance is effected by the size of the input coupling capacitor, C_i. A larger input coupling capacitor requires more charge to reach its quiescent DC voltage (nominally 1/2 V_{DD}). This charge comes from the output via the feedback and is apt to create pops upon device enable. Thus, by minimizing the capacitor size based on necessary low frequency response, turn-on pops can be minimized.

Besides minimizing the input capacitor size, careful consideration should be paid to the bypass capacitor value. Bypass capacitor, C_B, is the most critical component to minimize turn-on pops since it determines how fast the LM4990 turns on. The slower the LM4990's outputs ramp to their quiescent DC voltage (nominally 1/2 V_{DD}), the smaller the turn-on pop. Choosing C_B equal to 1.0µF along with a small value of C_i (in the range of 0.1µF to 0.39µF), should produce a virtually clickless and popless shutdown function. While the device will function properly, (no oscillations or motorboating), with C_B equal to 0.1µF, the device will be much more susceptible to turn-on clicks and pops. Thus, a value of C_B equal to 1.0µF is recommended in all but the most cost sensitive designs.

Copyright © 2002–2013, Texas Instruments Incorporated

AUDIO POWER AMPLIFIER DESIGN

A 1W/8Ω Audio Amplifier

Given:	Power Output	1Wrms
	Load Impedance	8Ω
	Input Level	1Vrms
	Input Impedance	20kΩ
	Bandwidth	100Hz–20kHz ± 0.25dB

A designer must first determine the minimum supply rail to obtain the specified output power. By extrapolating from the Output Power vs Supply Voltage graphs in the Typical Performance Characteristics section, the supply rail can be easily found.

5V is a standard voltage in most applications, it is chosen for the supply rail. Extra supply voltage creates headroom that allows the LM4990 to reproduce peaks in excess of 1W without producing audible distortion. At this time, the designer must make sure that the power supply choice along with the output impedance does not violate the conditions explained in the POWER DISSIPATION section.

Once the power dissipation equations have been addressed, the required differential gain can be determined from Equation 3.

$$A_{VD} \geq \sqrt{(P_O R_L)}/(V_{IN}) = V_{orms}/V_{inrms} \quad (3)$$

$$R_f/R_i = A_{VD}/2 \quad (4)$$

From Equation 3, the minimum A_{VD} is 2.83; use A_{VD} = 3.

Since the desired input impedance was 20kΩ, and with a A_{VD} impedance of 2, a ratio of 1.5:1 of R_f to R_i results in an allocation of R_i = 20kΩ and R_f = 30kΩ. The final design step is to address the bandwidth requirements which must be stated as a pair of −3dB frequency points. Five times away from a −3dB point is 0.17dB down from passband response which is better than the required ±0.25dB specified.

f_L = 100Hz/5 = 20Hz

f_H = 20kHz * 5 = 100kHz

As stated in the External Components Description section, R_i in conjunction with C_i create a highpass filter.

$$C_i \geq 1/(2\pi*20k\Omega*20Hz) = 0.397\mu F; \text{ use } 0.39\mu F \quad (5)$$

The high frequency pole is determined by the product of the desired frequency pole, f_H, and the differential gain, A_{VD}. With a A_{VD} = 3 and f_H = 100kHz, the resulting GBWP = 300kHz which is much smaller than the LM4990 GBWP of 2.5MHz. This figure displays that if a designer has a need to design an amplifier with a higher differential gain, the LM4990 can still be used without running into bandwidth limitations.

Copyright © 2002–2013, Texas Instruments Incorporated

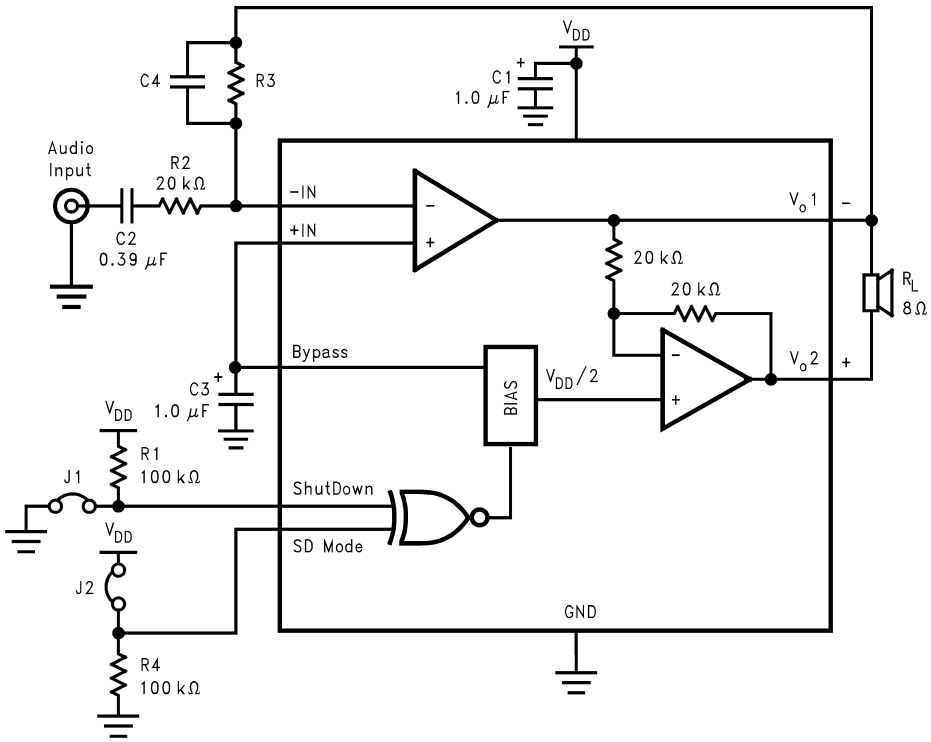

Figure 41. HIGHER GAIN AUDIO AMPLIFIER

The LM4990 is unity-gain stable and requires no external components besides gain-setting resistors, an input coupling capacitor, and proper supply bypassing in the typical application. However, if a closed-loop differential gain of greater than 10 is required, a feedback capacitor (C4) may be needed as shown in Figure 2 to bandwidth limit the amplifier. This feedback capacitor creates a low pass filter that eliminates possible high frequency oscillations. Care should be taken when calculating the -3dB frequency in that an incorrect combination of R_3 and C_4 will cause rolloff before 20kHz. A typical combination of feedback resistor and capacitor that will not produce audio band high frequency rolloff is R_3 = 20kΩ and C_4 = 25pf. These components result in a -3dB point of approximately 320kHz.

Copyright © 2002–2013, Texas Instruments Incorporated

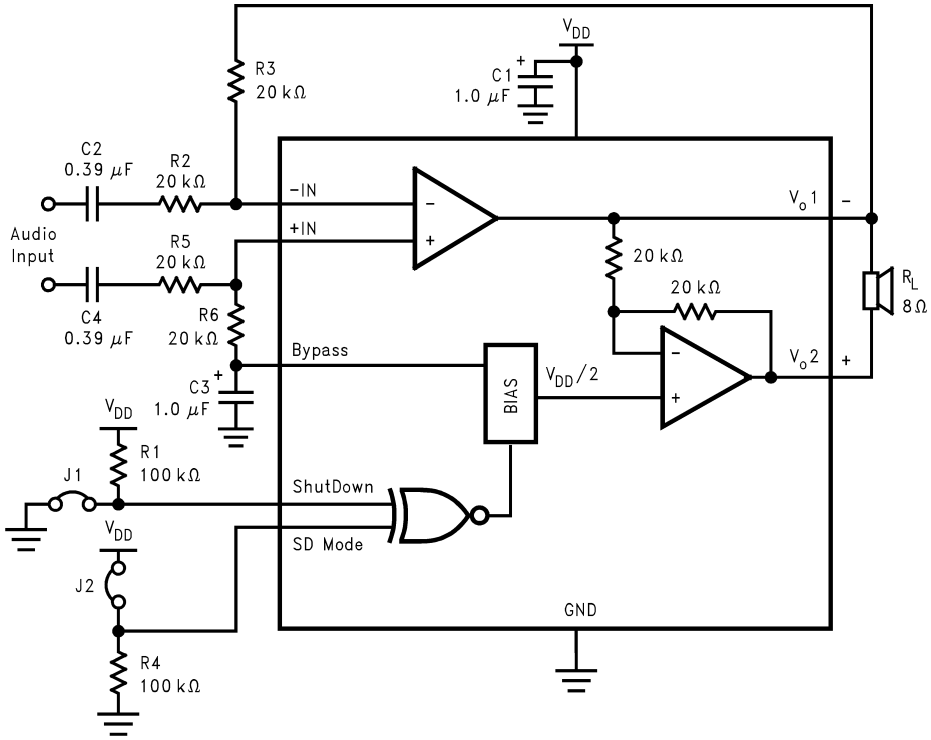

Figure 42. DIFFERENTIAL AMPLIFIER CONFIGURATION FOR LM4990

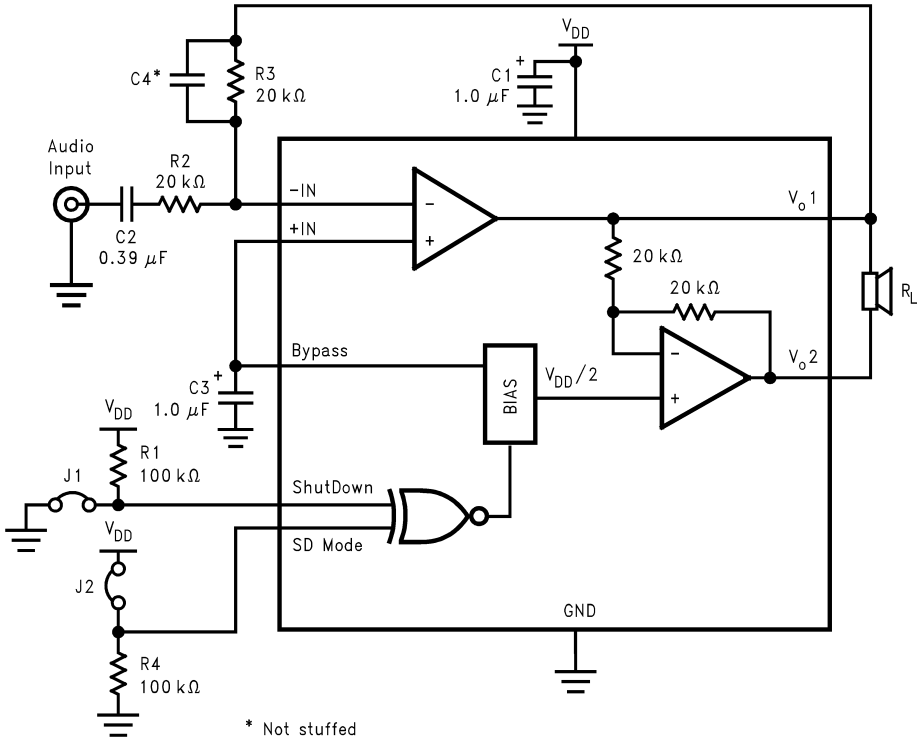

Figure 43. REFERENCE DESIGN BOARD SCHEMATIC

REVISION HISTORY

Changes from Revision D (May 2013) to Revision E	Page
• Changed layout of National Data Sheet to TI format	19

Copyright © 2002–2013, Texas Instruments Incorporated

PACKAGING INFORMATION

Orderable Device	Status (1)	Package Type	Package Drawing	Pins	Package Qty	Eco Plan (2)	Lead/Ball Finish (6)	MSL Peak Temp (3)	Op Temp (°C)	Device Marking (4/5)	Samples
LM4990ITL/NOPB	ACTIVE	DSBGA	YZR	9	250	Green (RoHS & no Sb/Br)	SNAGCU	Level-1-260C-UNLIM	-40 to 85	G D2	Samples
LM4990ITLX/NOPB	ACTIVE	DSBGA	YZR	9	3000	Green (RoHS & no Sb/Br)	SNAGCU	Level-1-260C-UNLIM	-40 to 85	G D2	Samples
LM4990LD/NOPB	NRND	WSON	NGZ	10	1000	Green (RoHS & no Sb/Br)	SN	Level-3-260C-168 HR	-40 to 85	L4990	
LM4990MH/NOPB	ACTIVE	HVSSOP	DGQ	10	1000	Green (RoHS & no Sb/Br)	SN	Level-3-260C-168 HR	-40 to 85	4990	Samples
LM4990MM/NOPB	ACTIVE	VSSOP	DGK	8	1000	Green (RoHS & no Sb/Br)	SN	Level-1-260C-UNLIM	-40 to 85	GA5	Samples
LM4990MMX/NOPB	ACTIVE	VSSOP	DGK	8	3500	Green (RoHS & no Sb/Br)	SN	Level-1-260C-UNLIM	-40 to 85	GA5	Samples

(1) The marketing status values are defined as follows:
ACTIVE: Product device recommended for new designs.
LIFEBUY: TI has announced that the device will be discontinued, and a lifetime-buy period is in effect.
NRND: Not recommended for new designs. Device is in production to support existing customers, but TI does not recommend using this part in a new design.
PREVIEW: Device has been announced but is not in production. Samples may or may not be available.
OBSOLETE: TI has discontinued the production of the device.

(2) **RoHS:** TI defines "RoHS" to mean semiconductor products that are compliant with the current EU RoHS requirements for all 10 RoHS substances, including the requirement that RoHS substance do not exceed 0.1% by weight in homogeneous materials. Where designed to be soldered at high temperatures, "RoHS" products are suitable for use in specified lead-free processes. TI may reference these types of products as "Pb-Free".
RoHS Exempt: TI defines "RoHS Exempt" to mean products that contain lead but are compliant with EU RoHS pursuant to a specific EU RoHS exemption.
Green: TI defines "Green" to mean the content of Chlorine (Cl) and Bromine (Br) based flame retardants meet JS709B low halogen requirements of <=1000ppm threshold. Antimony trioxide based flame retardants must also meet the <=1000ppm threshold requirement.

(3) MSL, Peak Temp. - The Moisture Sensitivity Level rating according to the JEDEC industry standard classifications, and peak solder temperature.

(4) There may be additional marking, which relates to the logo, the lot trace code information, or the environmental category on the device.

(5) Multiple Device Markings will be inside parentheses. Only one Device Marking contained in parentheses and separated by a "~" will appear on a device. If a line is indented then it is a continuation of the previous line and the two combined represent the entire Device Marking for that device.

(6) Lead/Ball Finish - Orderable Devices may have multiple material finish options. Finish options are separated by a vertical ruled line. Lead/Ball Finish values may wrap to two lines if the finish value exceeds the maximum column width.

Important Information and Disclaimer: The information provided on this page represents TI's knowledge and belief as of the date that it is provided. TI bases its knowledge and belief on information provided by third parties, and makes no representation or warranty as to the accuracy of such information. Efforts are underway to better integrate information from third parties. TI has taken and continues to take reasonable steps to provide representative and accurate information but may not have conducted destructive testing or chemical analysis on incoming materials and chemicals. TI and TI suppliers consider certain information to be proprietary, and thus CAS numbers and other limited information may not be available for release.

In no event shall TI's liability arising out of such information exceed the total purchase price of the TI part(s) at issue in this document sold by TI to Customer on an annual basis.

TAPE AND REEL INFORMATION

REEL DIMENSIONS

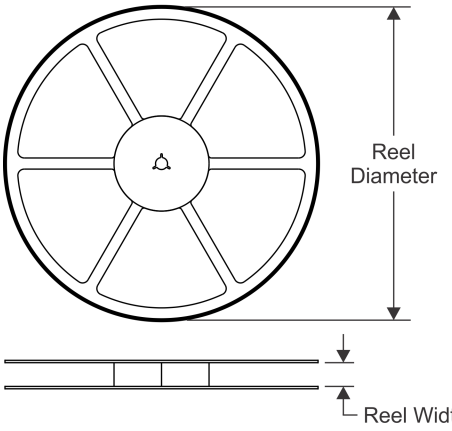

TAPE DIMENSIONS

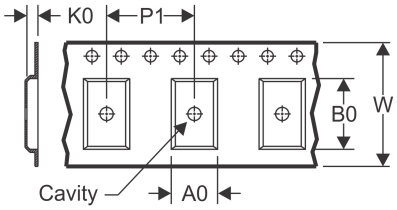

A0	Dimension designed to accommodate the component width
B0	Dimension designed to accommodate the component length
K0	Dimension designed to accommodate the component thickness
W	Overall width of the carrier tape
P1	Pitch between successive cavity centers

QUADRANT ASSIGNMENTS FOR PIN 1 ORIENTATION IN TAPE

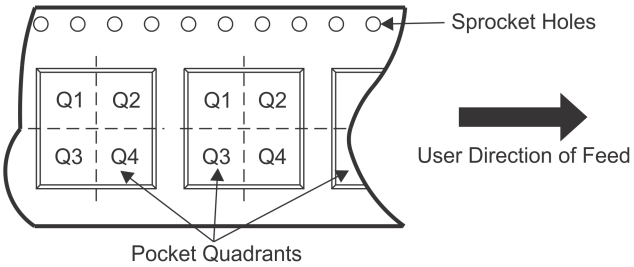

*All dimensions are nominal

Device	Package Type	Package Drawing	Pins	SPQ	Reel Diameter (mm)	Reel Width W1 (mm)	A0 (mm)	B0 (mm)	K0 (mm)	P1 (mm)	W (mm)	Pin1 Quadrant
LM4990ITL/NOPB	DSBGA	YZR	9	250	178.0	8.4	1.57	1.57	0.76	4.0	8.0	Q1
LM4990ITLX/NOPB	DSBGA	YZR	9	3000	178.0	8.4	1.57	1.57	0.76	4.0	8.0	Q1
LM4990LD/NOPB	WSON	NGZ	10	1000	178.0	12.4	4.3	3.3	1.0	8.0	12.0	Q1
LM4990MH/NOPB	HVSSOP	DGQ	10	1000	178.0	12.4	5.3	3.4	1.4	8.0	12.0	Q1
LM4990MM/NOPB	VSSOP	DGK	8	1000	178.0	12.4	5.3	3.4	1.4	8.0	12.0	Q1
LM4990MMX/NOPB	VSSOP	DGK	8	3500	330.0	12.4	5.3	3.4	1.4	8.0	12.0	Q1

TAPE AND REEL BOX DIMENSIONS

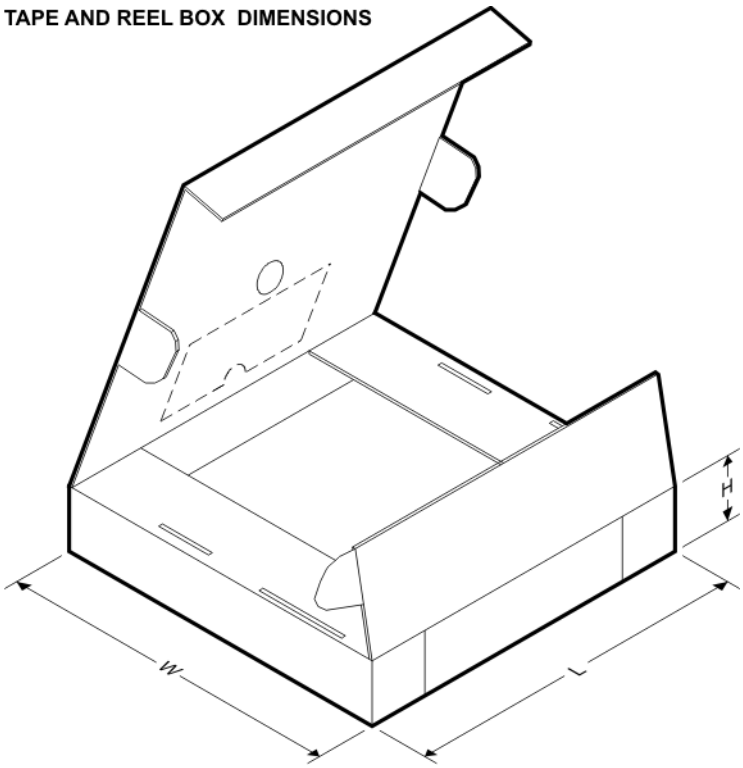

*All dimensions are nominal

Device	Package Type	Package Drawing	Pins	SPQ	Length (mm)	Width (mm)	Height (mm)
LM4990ITL/NOPB	DSBGA	YZR	9	250	210.0	185.0	35.0
LM4990ITLX/NOPB	DSBGA	YZR	9	3000	210.0	185.0	35.0
LM4990LD/NOPB	WSON	NGZ	10	1000	210.0	185.0	35.0
LM4990MH/NOPB	HVSSOP	DGQ	10	1000	210.0	185.0	35.0
LM4990MM/NOPB	VSSOP	DGK	8	1000	210.0	185.0	35.0
LM4990MMX/NOPB	VSSOP	DGK	8	3500	367.0	367.0	35.0

NGZ0010B

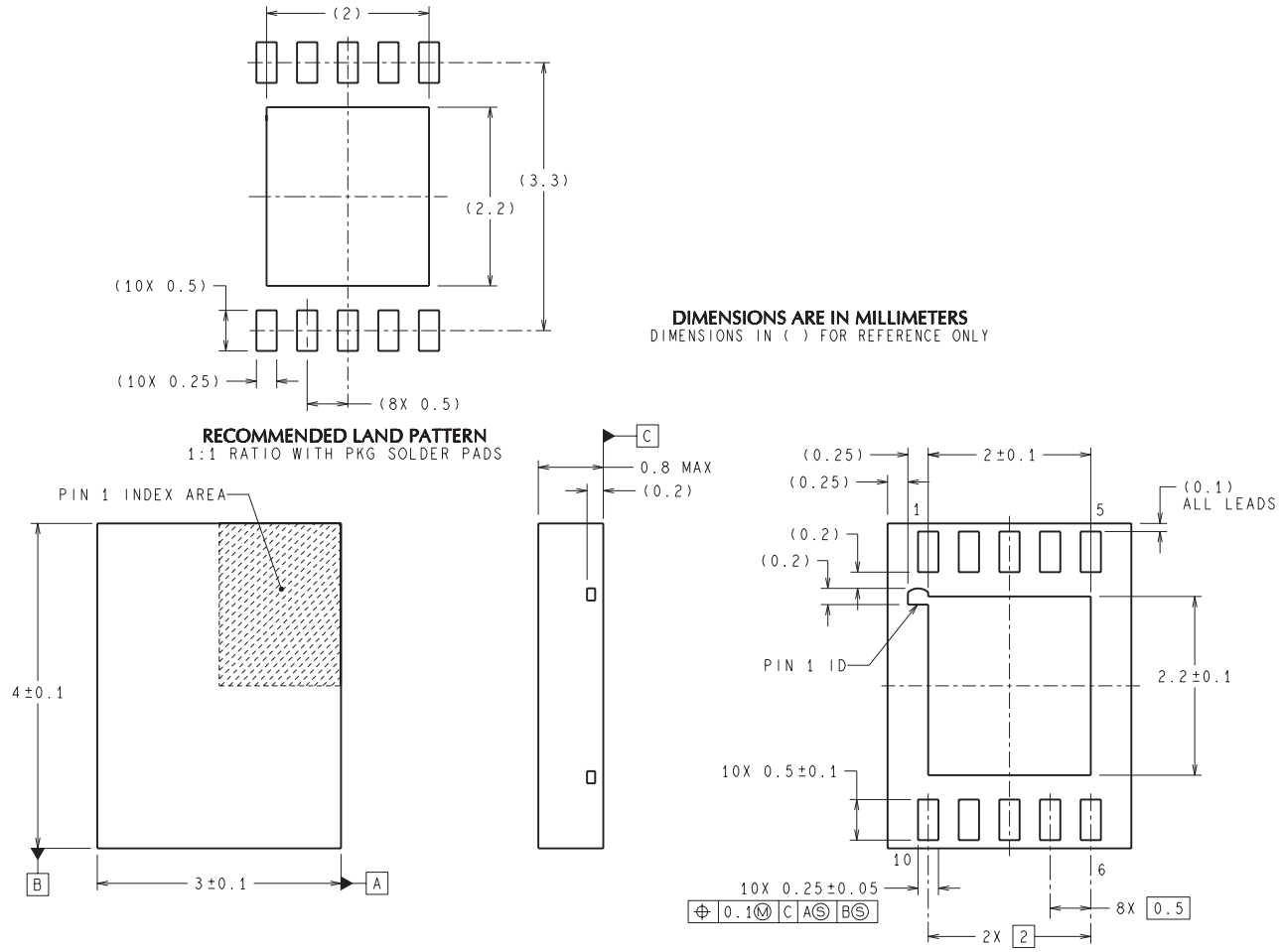

LDA10B (Rev B)

DGK (S–PDSO–G8) PLASTIC SMALL–OUTLINE PACKAGE

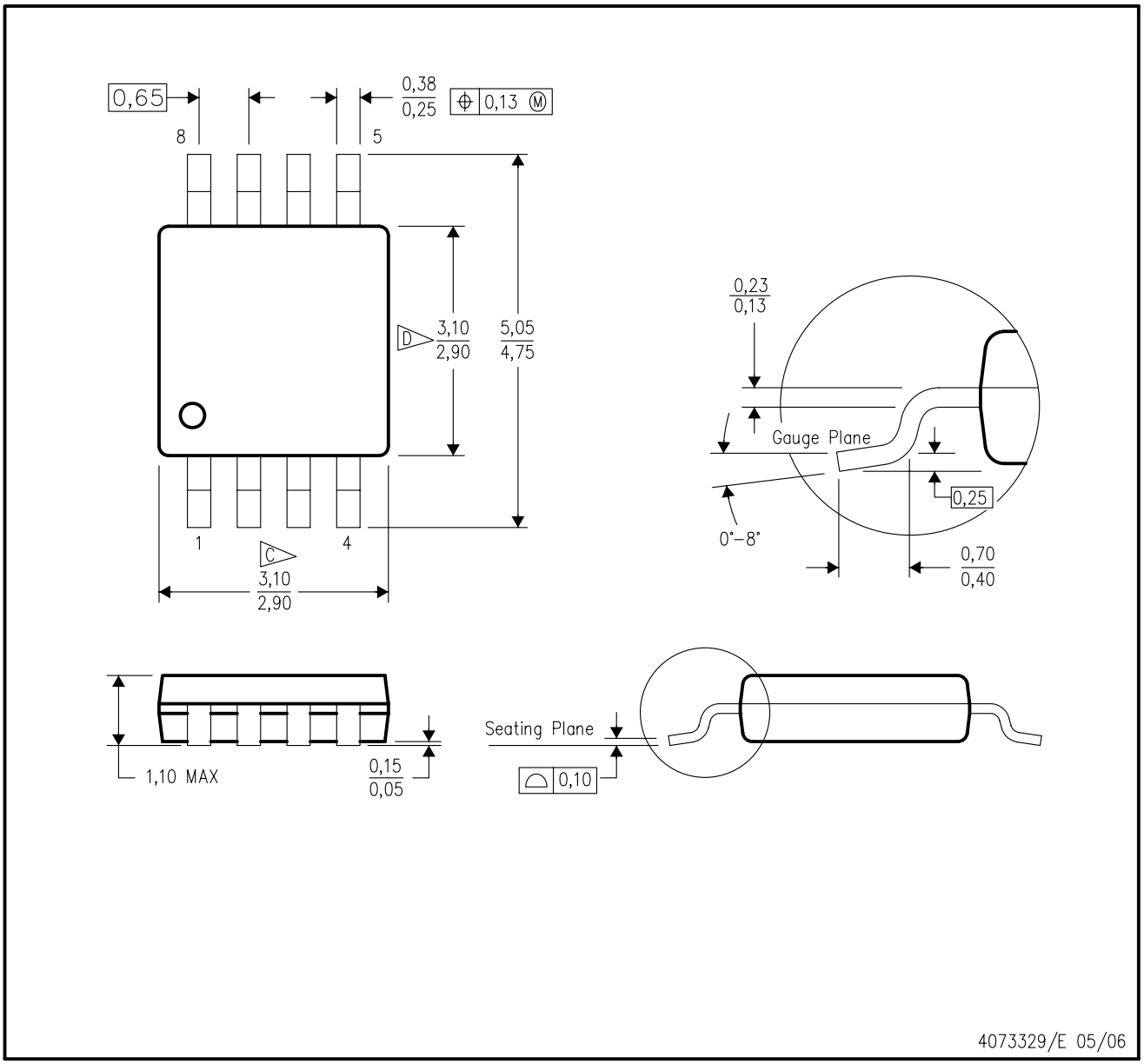

NOTES:
A. All linear dimensions are in millimeters.
B. This drawing is subject to change without notice.
C. Body length does not include mold flash, protrusions, or gate burrs. Mold flash, protrusions, or gate burrs shall not exceed 0.15 per end.
D. Body width does not include interlead flash. Interlead flash shall not exceed 0.50 per side.
E. Falls within JEDEC MO–187 variation AA, except interlead flash.

DGK (S–PDSO–G8) PLASTIC SMALL OUTLINE PACKAGE

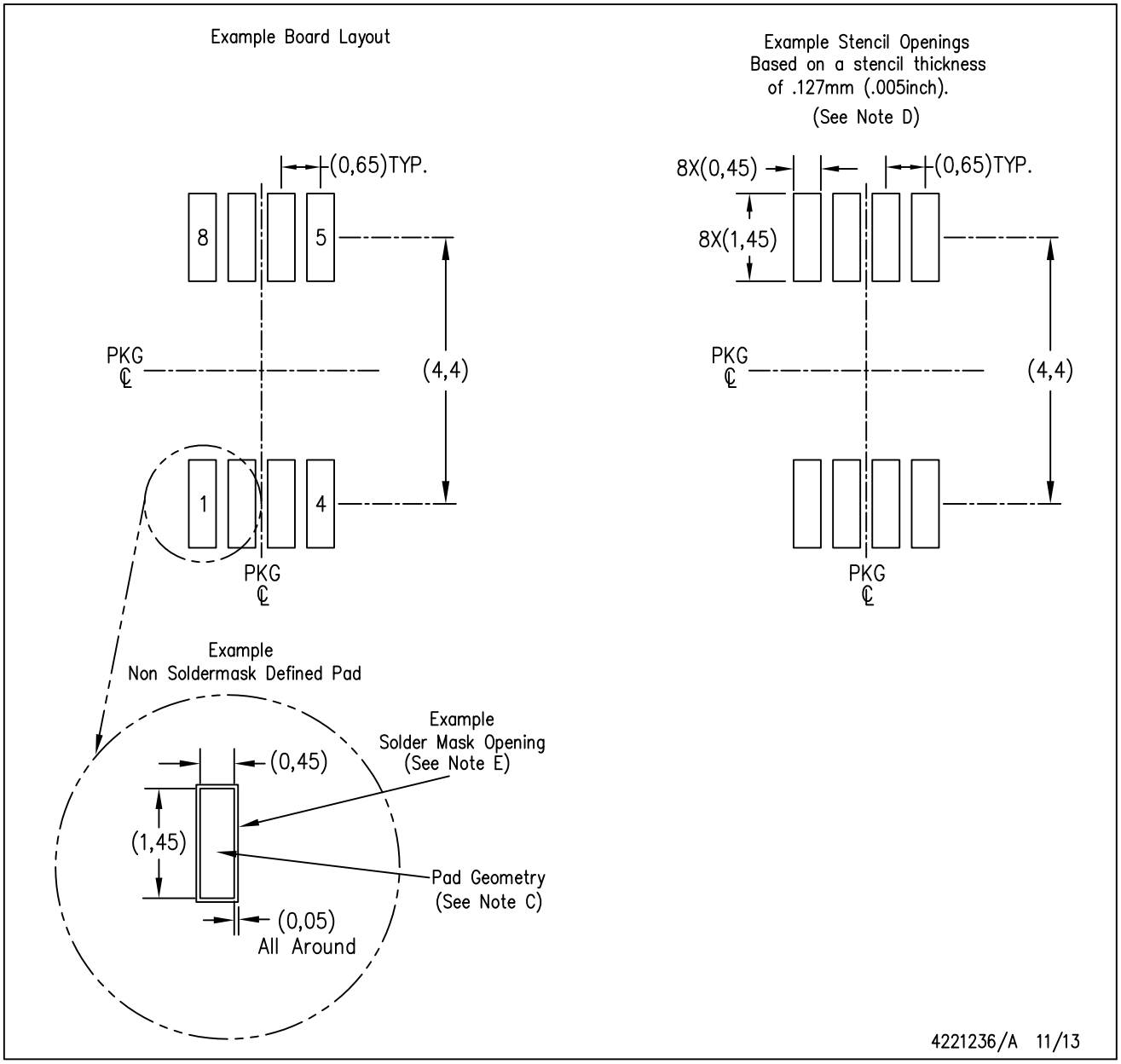

NOTES:
A. All linear dimensions are in millimeters.
B. This drawing is subject to change without notice.
C. Publication IPC–7351 is recommended for alternate designs.
D. Laser cutting apertures with trapezoidal walls and also rounding corners will offer better paste release. Customers should contact their board assembly site for stencil design recommendations. Refer to IPC–7525 for other stencil recommendations.
E. Customers should contact their board fabrication site for solder mask tolerances between and around signal pads.

YZR0009

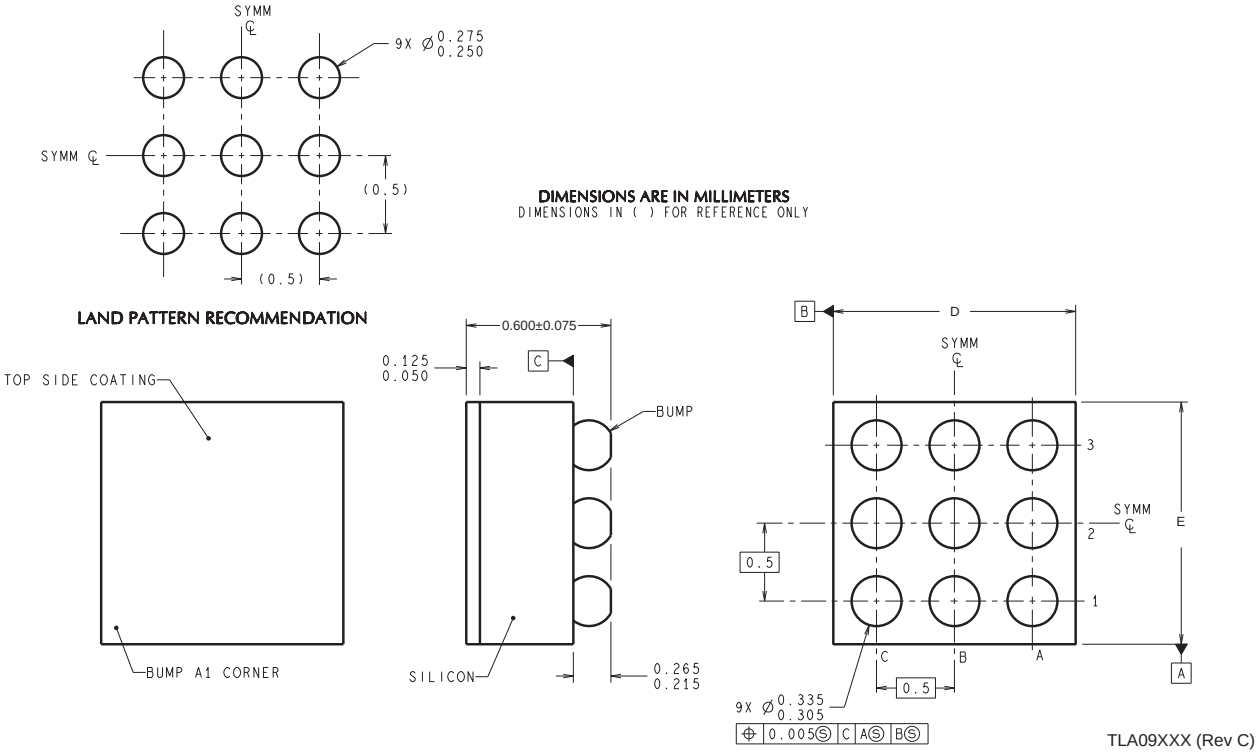

D: Max = 1.502 mm, Min =1.441 mm

E: Max = 1.502 mm, Min =1.441 mm

4215046/A 12/12

NOTES: A. All linear dimensions are in millimeters. Dimensioning and tolerancing per ASME Y14.5M-1994.
B. This drawing is subject to change without notice.

IMPORTANT NOTICE AND DISCLAIMER

TI PROVIDES TECHNICAL AND RELIABILITY DATA (INCLUDING DATASHEETS), DESIGN RESOURCES (INCLUDING REFERENCE DESIGNS), APPLICATION OR OTHER DESIGN ADVICE, WEB TOOLS, SAFETY INFORMATION, AND OTHER RESOURCES “AS IS” AND WITH ALL FAULTS, AND DISCLAIMS ALL WARRANTIES, EXPRESS AND IMPLIED, INCLUDING WITHOUT LIMITATION ANY IMPLIED WARRANTIES OF MERCHANTABILITY, FITNESS FOR A PARTICULAR PURPOSE OR NON-INFRINGEMENT OF THIRD PARTY INTELLECTUAL PROPERTY RIGHTS.

These resources are intended for skilled developers designing with TI products. You are solely responsible for (1) selecting the appropriate TI products for your application, (2) designing, validating and testing your application, and (3) ensuring your application meets applicable standards, and any other safety, security, or other requirements. These resources are subject to change without notice. TI grants you permission to use these resources only for development of an application that uses the TI products described in the resource. Other reproduction and display of these resources is prohibited. No license is granted to any other TI intellectual property right or to any third party intellectual property right. TI disclaims responsibility for, and you will fully indemnify TI and its representatives against, any claims, damages, costs, losses, and liabilities arising out of your use of these resources.

TI’s products are provided subject to TI’s Terms of Sale (www.ti.com/legal/termsofsale.html) or other applicable terms available either on ti.com or provided in conjunction with such TI products. TI’s provision of these resources does not expand or otherwise alter TI’s applicable warranties or warranty disclaimers for TI products.

Mailing Address: Texas Instruments, Post Office Box 655303, Dallas, Texas 75265
Copyright © 2020, Texas Instruments Incorporated